City of Brazil Utilities
Application for Water/Waste Water Tap Permits

Application No. _____ Type of Tap: ☐ Water Tap ☐ Sewer Tap

☐ Service Location currently within the Corporate limits of Brazil

☐ Service Location currently **NOT** within the Corporate limits of Brazil

☐ Existing Service available at Property Line

☐ Requires Tapping of mainline

Service Address: _____

Lot: _____ Block : _____ Subdivision/Land Status: _____

Meter Size: _____ Irrigation Meter Size: _____

Customer/Company Name: _____

DL# or Tax ID#: _____ or Social Security No: _____

Billing Address: _____

_____

Phone #: _____ Alt Phone #: _____

Type of Structure to Receive Service (check all that apply)

_____ Home/Single Family	_____ # of Bathrooms	_____ Townhouse/Condo	_____ # of Bathrooms
_____ Two-Dwelling Units	_____ # of Bathrooms per Unit	_____ Mobile/Manufacture Home	_____ # of Bathrooms per Unit
_____ Three-Dwelling Units	_____ # of Bathrooms per Unit	_____ Garage Apartment	_____ # of Bathrooms per Unit
_____ Four-Dwelling Units	_____ # of Bathrooms per Unit	_____ Other/Please Specify	_____

_____ Residential Irrigation meter: If applying for an irrigation meter for a strcuture which has an existing domestic meter, please provide the:

Address: _____ Acct #: _____ Meter #: _____

I have read the "Applicant's Instructions and Conditions" and agree to the terms of this Tap Application.
The Tap Permit will expire two (2) years after the date of issue; refunds will not be processed after the expiration date.

Applicant's Printed Name: _____

Signature: _____ Date: _____

Utilities Office Use Only

Water Tap:

Location: _____ Type/Size: _____

Connection Permit Fee: _____ + _____ (Cost of Meter)

Total Water Tap Fee: _____

Date Mtr Set: _____ Meter ID: _____ Read: _____

Inspected by: _____ s/o #: _____

Sewer Tap:

Location: _____

Connection Permit Fee: _____ + _____ /LF of pipeline and/or EDU

Total Sewer Tap Fee: _____

Inspected by: _____ s/o #: _____

Comments: _____

City of Brazil
Brazil Utilities
Application for **Residential** Water/Waste Water Tap Permits

Applicant Instruction and TAP Conditions:

I hereby apply for a tap connection to the water and/or wastewater system at the service address noted on this application. If any of the information I have provided is incorrect, I understand that I may be required to pay additional tap fees; capital recovery fees or other cost associated with relocation of water or wastewater connections.

Your signature signifies you have read and understand this information, and that you authorize the Brazil Utilities to enter upon the above-described private property for the purpose of inspecting the tap location. Applications will not be processed without a signature.

Water Tapping Fees:

a) Service connections shall be installed only with a valid permit. Written application for all new service shall be made at City Hall, specifying that applicant will use water and pay for same at scheduled rates for a period of at least one year, beginning within 90 days from date of application; the application shall be made on printed forms of the Waterworks
b) The Waterworks shall make the tap in the water main. It shall be the responsibility of the Waterworks to expose the water mainline, set saddle, install corporation stop, install the service line to the water meter pit, install meter pit, meter, and terminate approximately 2 feet from the meter pit for connection by the customer.
c) Water connection permit fees shall be as follows:
    1) Permit fee for ⅝ or ¾ inch meter tap shall be $1,200.00, plus the cost of the meter (as determined by the Waterworks).
    2) Permit fee for a tap larger than ¾ inch shall be the cost of labor, materials, machinery, transportation, overhead cost and other costs determined by the Water Works to be applicable to install the tap, but shall not be less than $1,200.00, plus the cost of meter (as determined by the Waterworks).
    3) Permit fee for developments for multiple single family home sits shall be $1.25 linear foot of waterline to cover the cost of reviewing construction drawings, issuing the permit and conducting periodic inspections of the construction.
    4) If written approval is received from the Board of Works and Safety and the Waterworks Superintendent, a developer of multiple single or multiple family home sites may install all water lines and meter pit wells at developers cost. The developer shall by Waterworks a tap permit fee of $100.00 plus the cost of the meter (as determined by the Waterworks).

(City of Brazil Ordinance No.12-2008)

Apartment Building and Subdivision Tap Approval Inspection

Water lines are to be left exposed until an inspection by the Brazil City Water Department has been completed and approved. A copy of the approval sheet will be kept in the Utilities Office.

Wastewater Tapping Fees:

a) No owner or occupant of any real property shall tap or drain either directly or indirectly into any public sewer until a sewer tap permit has been obtained from the City of Brazil and until he/her has satisfied his/her obligation to pay all assessments, reimbursements, or pro rata shares of sewer extensions cost levied against the property for public sewers installed to serve it. The application for such permit shall be made on a form furnished by the City, which the applicant shall supplement by any plans, specifications, and other information as are deemed necessary by the Superintendent. A tap permit given in error or sewerage service charges billed to a property in error shall not operate to nullify any such obligation that has been duly recorded.
b) Sewer tap permit fees shall be as follows:

1) Permit fee for developments for multiple single family home sites shall be $1.25 per linear foot of pipe to cover the cost of reviewing construction drawings, issuing the permit, and conducting periodic inspections of the construction.
2) Permit fee for site development to connect to mainline sewer to a building or single family dwelling shall be as follows:

Water Meter Sizes	Tap Fee
¾ inch or less	$600
1 inch	$800
1 ½ inch	$1,000
2 inch	$1,200
Larger	*

*The charge for a tap larger than the two (2) inch meter shall be the cost of labor, materials, power machinery, transportation and overhead cost for installing the tap, but shall not be less than the charge for a two (2) inch meter tap. Any customer that receives his/her water supply from a privately owned well and is not a part of Brazil City Water System or any wholesale customer of the Brazil City Water System and utilizes the Brazil City public sanitary system shall be hereinafter referred to as **welled customer**. Residential welled customers shall pay the tap fee equal to that of ¾ inch water meter or $600. Any commercial welled customer tap fee will be charged based on multiple equivalent dwelling units based on Table 11-1 of the Indiana Administrative Code 327 IAC 3-6-11. One equivalent dwelling unit equals 300 gallons per day for purposes of this ordinance. Indiana Administrative Code 327 IAC 3-6-11 is to be used to determine the estimated flow of wastewater based on gallons per day.

c) The Board of Public Works and Safety shall have the authority to require any owner of real property to disconnect from a building sewer which drains into a sanitary sewer any down spouts, yard drains, or other drains which carry the run off of natural precipitation. Property owners shall have 30 days after notice to comply with any such requirements. The Board of Public Works and Safety shall have the authority to authorize the owner of real property to connect a building sewer which drains into a sanitary sewer any down spouts, yard drains, or other drains which carry the run off of natural precipitation if the drains are proved to cause mosquito breeding ponds, structural damage, or jeopardizes the general health of the public on a regular basis for a fee established by the Board of Public Works and Safety. The Board of Public Works and Safety shall not authorize any tap permit which will cause excess flow, B.O.D., or suspended solid loading of the wastewater treatment plant, force mains, lift stations, or sewers.
d) Superintendent shall be allowed to inspect the work at any stage of construction and, in any event, the applicant for the permit shall notify the Superintendent when the work is ready for final inspection, before any underground portions are covered. The inspection shall be made within 48 hours of the receipt of notice by the Superintendent.

(City of Brazil Ordinance No. 2-2007)

CITY OF BRAZIL WATER MAIN, PIT AND METER
TYPICAL DETAILS AND NOTES

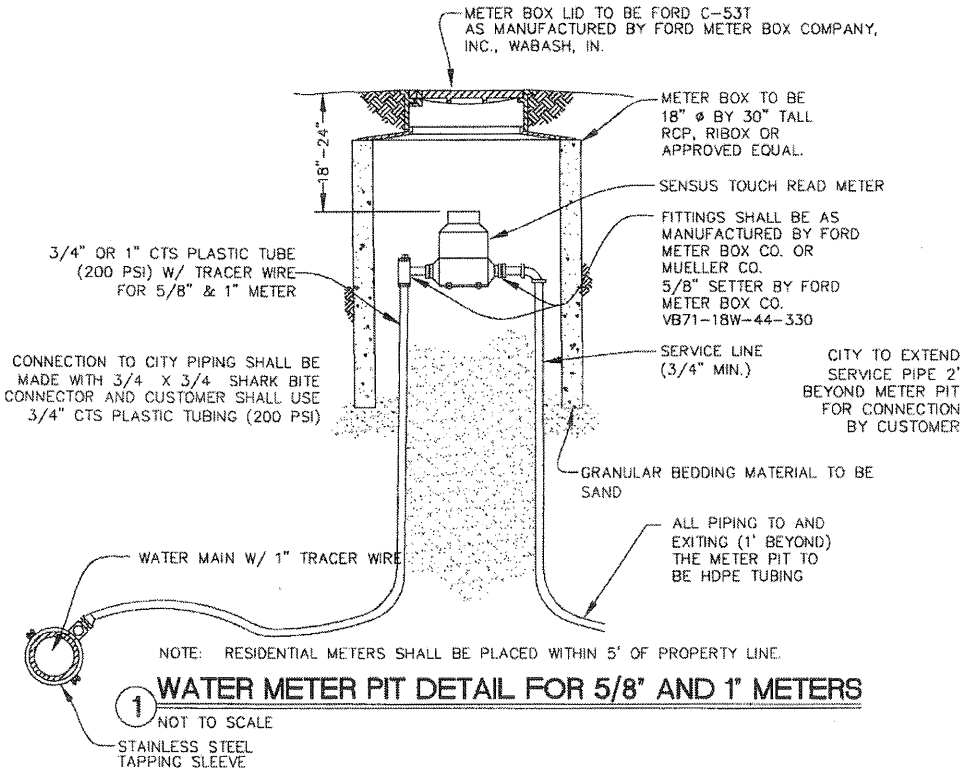

1 WATER METER PIT DETAIL FOR 5/8" AND 1" METERS

NOT TO SCALE

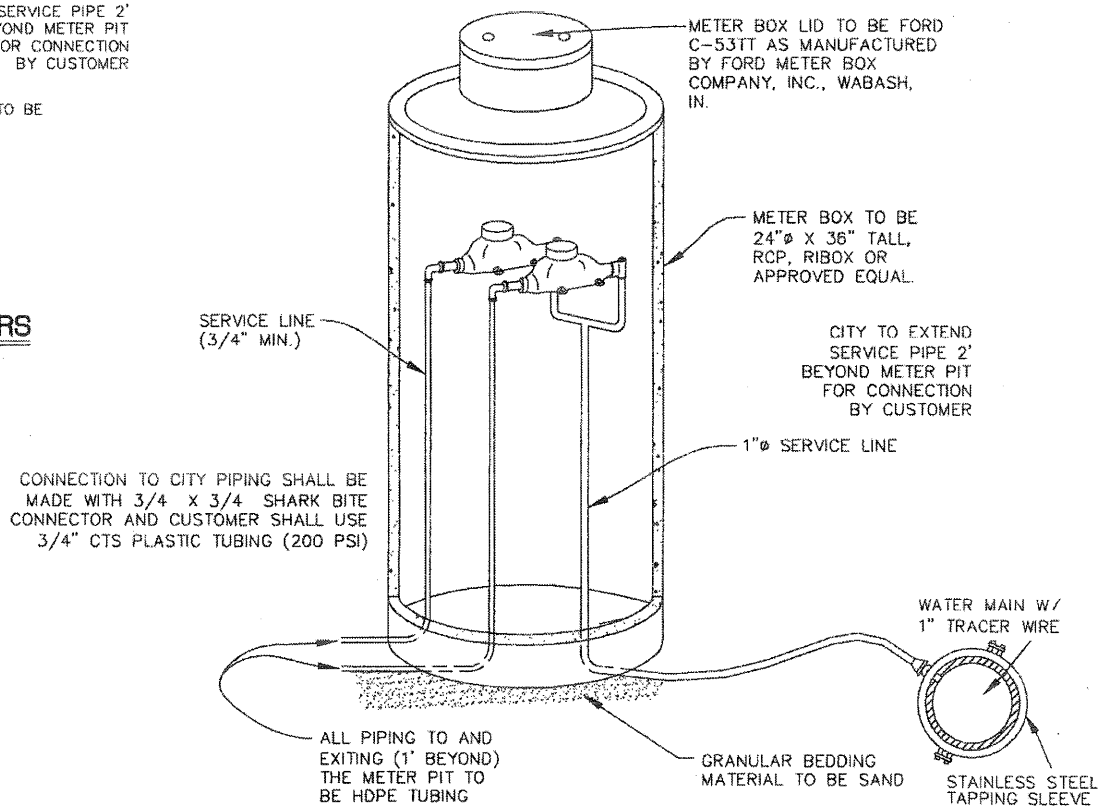

2 STANDARD DOUBLE METER PIT INSTALLATION FOR 5/8" METERS

NOT TO SCALE

CITY OF BRAZIL WATER MAIN, PIT AND METER

TYPICAL DETAILS AND NOTES

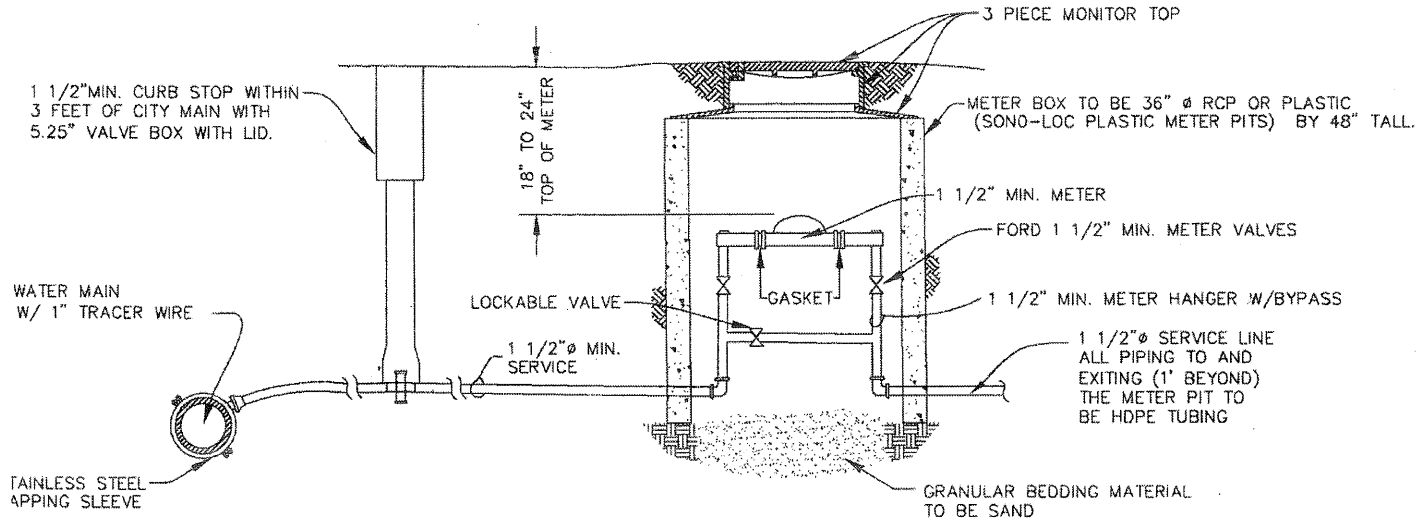

4 WATER METER PIT DETAIL FOR 1 1/2" AND 2" COMMERCIAL METERS

NOT TO SCALE

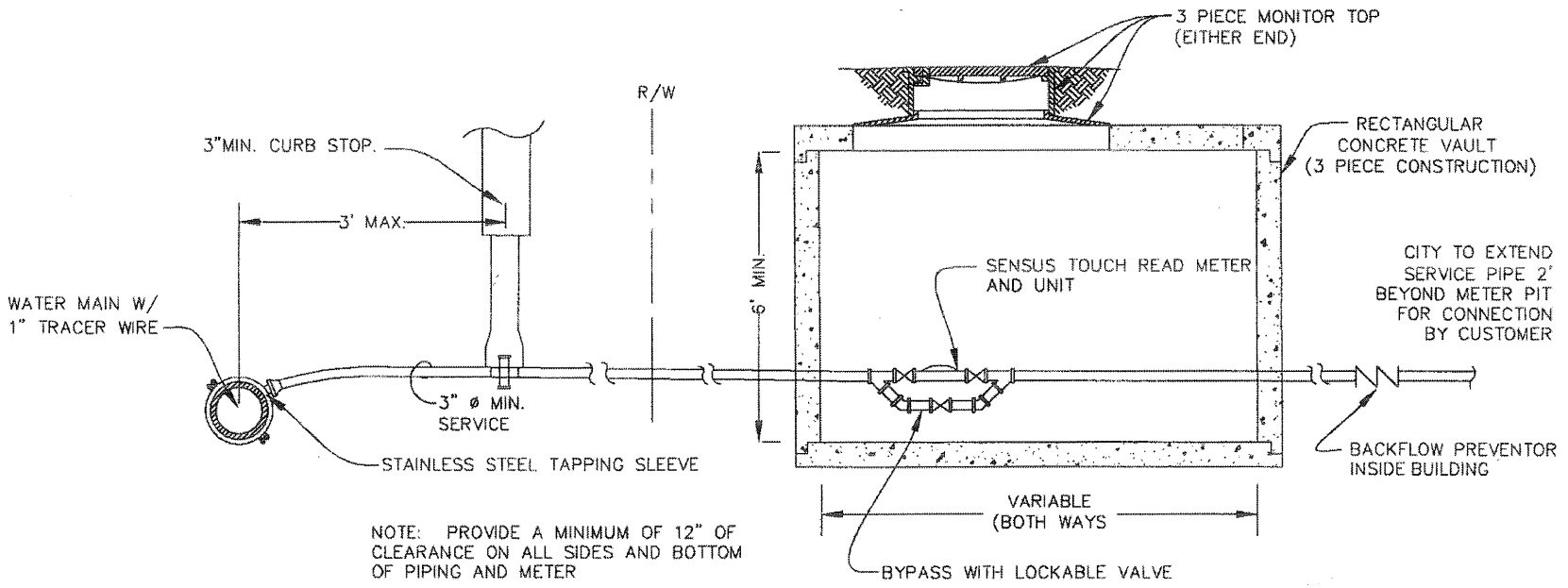

5 WATER METER VAULT DETAIL FOR 3" AND LARGER COMMERCIAL METERS

NOT TO SCALE

CITY OF BRAZIL WATER MAIN, PIT AND METER
TYPICAL DETAILS AND NOTES

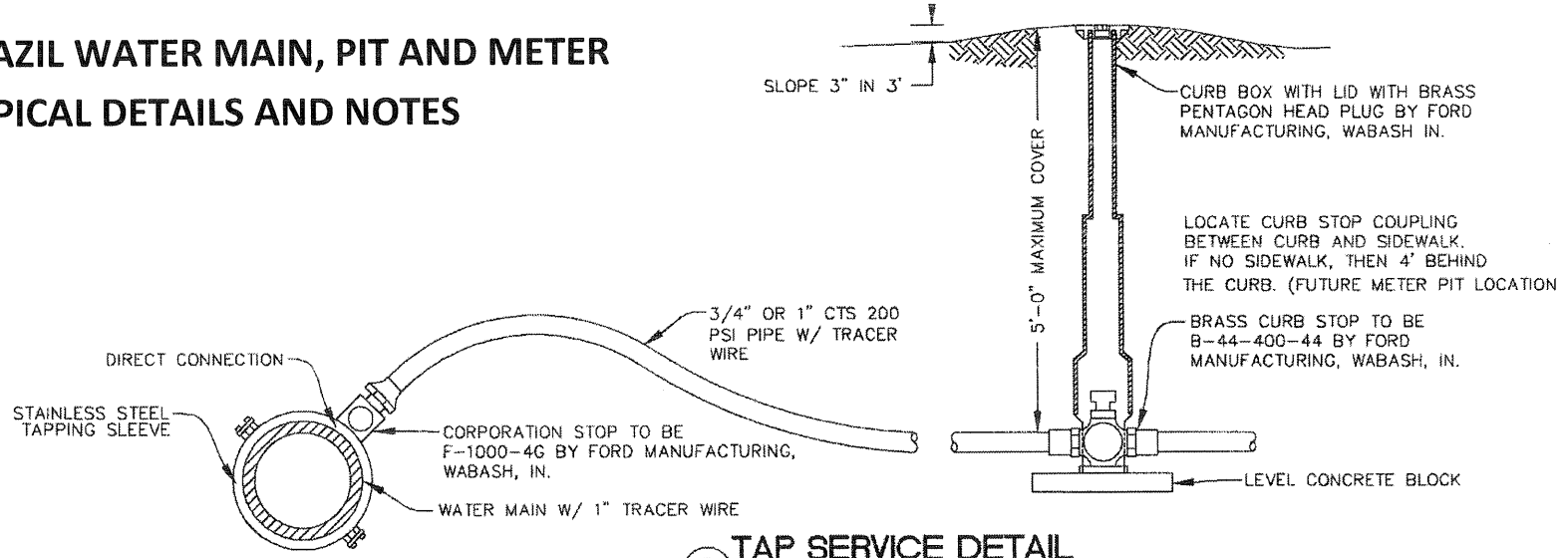

6 TAP SERVICE DETAIL
NOT TO SCALE

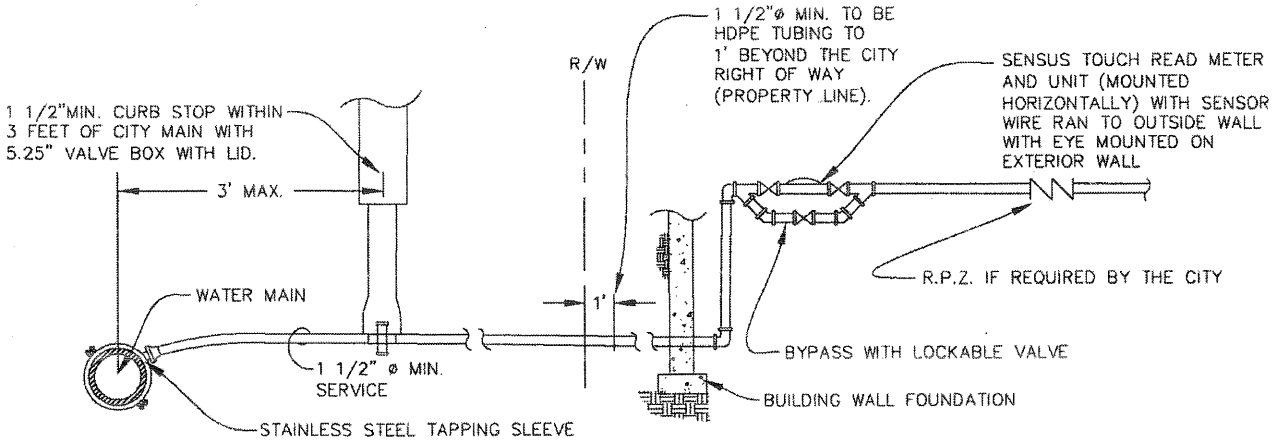

NOTE: METER SHALL BE MIN. OF 12" ABOVE FLOOR, MAX. OF 48" ABOVE FLOOR AND MIN. 12" FROM EXTERIOR WALL AND ALL SIDES OF METER.

7 INTERIOR METER INSTALLATION DETAIL FOR 1 1/2" AND LARGER COMMERCIAL METERS
NOT TO SCALE

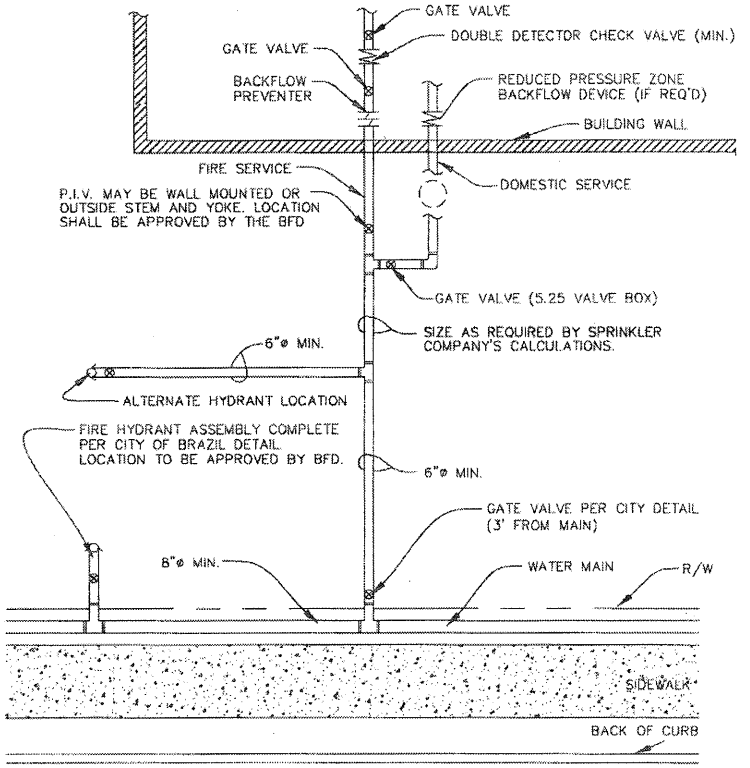

8 COMMERCIAL LOT WITH FIRE SERVICE DETAIL (TYP.)
NOT TO SCALE

3 WATER MAIN NOTES

1. ALL WATER MAINS SHALL BE CEMENT LINE DUCTILE IRON (D.I.) OR PVC (PRESSURE CLASS 250 MIN., SLIP JOINT PIPE CONFORMING TO AWWA C-110, C-111, C-150 AND C-151 AS APPLICABLE AND NSF-61.
2. PIPE SHALL MEET THE REQUIREMENTS OF ASTM D2241-96b, POLYVINYL CHLORIDE PRESSURE-RATED PIPE (SDR21) AND BASED ON OUTSIDE DIMENSIONS.
   ALL PIPE SHALL BE SUITABLE FOR USE AS PRESSURE CONDUIT. PROVISIONS MUST BE MADE FOR EXPANSION AND CONTRACTION AT EACH JOINT WITH AN ELECASTOMERIC RING. THE BELL SHALL CONSIST OF AN INTEGRAL WALL SECTION WITH A SOLID CROSS SECTION ELASTOMERIC RING, WHICH MEETS THE REQUIREMENTS OF ASTM F-477. THE BELL SECTION SHALL BE DESIGNED TO BE AT LEAST AS HYDROSTATICALLY STRONG AS THE PIPE WALL AND MEET THE REQUIREMENTS OF AWWA C900 AND C905. EACH STANDARD AND RANDOM LENGTH OF PIPE SHALL BE TESTED TO TWO TIMES THE RATED PRESSURE OF THE PIPE FOR A MINIMUM OF 5 SECONDS. THE INTEGRAL BELL SHALL BE TESTED WITH THE PIPE.
3. ALL FITTINGS TO BE DUCTILE IRON (D.I.) WITH MECHANICAL JOINTS (M.J.) CONFORMING TO AWWA C-110, C-111, C-153, AND NSF-61.
4. ALL WATER SERVICE LINES SHALL BE ¾" (MINIMUM) OR 1" DIAMETER HDPE TUBING TERMINATING WITH A CURB STOP. SERVICE LINE LOCATIONS SHALL BE MARKED BY STAMPING OR SAW CUTTING A "W" IN THE CURB. THE CURB STOP/WATER SERVICE SHOULD BE LOCATED ON P/L OR WITHIN 5'.
5. THE MANUFACTURE'S ALLOWABLE PIPE DEFLECTION SHALL BE USED TO MAINTAIN THE VERTICAL AND HORIZONTAL ROUTE UNLESS OTHER FITTINGS (i.e. TEES AND ELBOWS) OR METHODS ARE SPECIFICALLY CALLED OUT, OR ARE DIRECTED BY THE CITY.
6. MEG-A-LUG RETAINER GLANDS BY EBBA IRON, INC., EASTLAND, TX SHALL BE USED ON EACH SIDE OF FITTINGS WHERE THE WATER MAIN CHANGES DIRECTION. ADDITIONAL SETS OF RETAINER GLANDS ARE TO BE PLACED AT PIPE LENGTHS ABOVE AND BELOW THE FITTINGS AS REQUIRE (SEE CHART ON SHEET #8). FIELD-LOK GASKETS OR ONE BOLT RESTRAINED FITTINGS CAN BE USED IN LIEU OF RETAINER GLANDS.
7. THE MINIMUM SIZE REQUIREMENT FOR ALL COMMERCIAL WATER SERVICE LATERALS IS ONE (1) INCH. (1" SERVICE LINE AND 1" METER). ANY COMMERCIAL OR GENERAL BUSINESS USER SHALL HAVE A BACKFLOW PREVENTER INSTALLED INSIDE THE BUILDING.
8. ALL INDUSTRIAL/COMMERCIAL DEVELOPMENTS SHALL HAVE A MINIMUM 6" X "MAIN SIZE" TEE INSTALLED TO EACH PROPOSED LOT FOR FUTURE FIRE/DOMESTIC SERVICE (SEE SITE PLAN FIRE SERVICE DETAIL).
9. WATER MAINS SHALL HAVE A MINIMUM OF 5'-0" COVER. WATER MAIN COVER SHALL NOT EXCEED 11' WITHOUT CITY APPROVAL. ANY DEVIATIONS FROM PLAN GRADE MUST BE SHOWN ON THE "AS-BUILT" DRAWINGS.
10. THE COMPLETED WATER MAIN SHALL BE SUBJECTED TO A 150 PSI HYDROSTATIC TEST AND SHALL BE DISINFECTED. ALL VALVES AND HYDRANTS MUST BE COMPLETELY OPENED AND CLOSED AND ALL CORPORATION STOPS AND SERVICE LINES IN PLACE PRIOR TO PERFORMING THE HYDROSTATIC TEST. THE HYDROSTATIC TEST SHALL BE OF AT LEAST 2-HR DURATION. TEST PRESSURE SHALL NOT VARY MORE THAN +/- 5 PSI FOR THE DURATION OF THE TEST. GAUGES FOR TESTING SHALL BE RATED FOR 150 PSI OR GREATER AND SHALL INDICATE PRESSURE IN 5 PSI (MAX) INCREMENTS. THE TEST WILL BE PERFORMED IN ACCORDANCE WITH CITY TESTING PROCEDURES, AND IN CONFORMANCE WITH AWWA C-600. ALL VALVES INCLUDING THE WATCH VALVES AT THE HYDRANTS SHALL BE OPEN DURING THE PRESSURE AND BACTERIA TESTS. HYDROSTATIC AND BACTERIAL TESTING SHALL BE COMPLETED WITHIN 30 DAYS AFTER THE COMPLETED WATER MAIN HAS BEEN CHARGED (FILLED). AFTER FINAL FLUSHING AND AGAIN AFTER 24 HOURS, SAMPLES SHALL BE COLLECTED FROM THE WATER MIAN, AND SHALL BE TESTED FOR BACTERIOLGICAL QUALITY IN ACCORDANCE WITH THE STANDARD METHODS FOR THE EXAMINATION OF WATER AND WASTEWATER (AT AN APPROVED LABORATORY), AND SHALL SHOW THE ABSENSE OF COLIFORM ORGANISMS. THE CONTRACTOR MUST CONTACT THE WATERWORKS PUBLIC WORKS INSPECTOR TO DETERMINE THE LOCATION AND NUMBER OF BACTERIA SAMPLES TO BE TAKEN, AND TO SET A SAMPLING DATE AND TIME. THE ORGINALS OF ALL TEST RESULTS AND CHAIN OF CUSTODY FORMS ARE TO BE SENT TO THE WATERWORKSWITHIN 5 DAYS OF TESTING WITH A COPY TO THE BRAZIL BOARD OF WORKS.
11. VALVE OPENING DIRECTION SHALL BE CONSISTENT WITH THE EXISTING UTILITY SYSTEM. (LEFT HAND OPEN/COUTNER CLOCKWISE) VALVE LOCATIONS SHALL BE MARKED BY STAMPING OR CUTTING A "V" IN THE CURB, AND PLACING A PARTIALLY BURIED 2X4 AT THE LOCATION.
12. TRENCHES UNDER PAVED AREAS (EXCLUDING SIDWALKS) SHALL BE BACKFILLED WITH GRANULAR MATERIAL PER INDIANA DEPARTMENT OF TRANSPORTATION "STANDARD SPECIFICATIONS", LATEST EDITION. SECTION 211, AND COMPACTED IN LIFTS. GRANULAR MATERIAL TO EXTEND FIVE FEET BEYOND THE LIMITS OF THE PAVED AREA WITH A 1:1 SLOPE TO THE BOTTOM OF THE TRENCH. GRANULAR BEDDING IS REQUIRED UNDER ALL PAVED AREAS (EXCLUDING SIDWALKS)
13. 18" VERTICAL SEPERATION AND 10'-0" HORIZONTAL SEPERATION TO BE MAINTAINED BETWEEN WATER MAINS, HYDRANTS, AND SEWERS (SANITARY AND STORM).
14. TAPS AND FITTINGS ARE NOT TO BE INSTALLED UNDER PAVEMENTS OR IN EASEMENTS WITHOUT PRIOR APPROVAL OF THE CITY.
15. WATERWORKS DEPARTMENT ONLY SHALL OPEN VALVES TO CHARGE NEW LINES.
16. TAPPING OF A CITY MAIN CAN ONLY BE DONE UNDER SUPERVISION OF THE CITY. TAPPING SLEEVES AND VALVES FOR PRESSURE TAPS ON MAINS UP TO 24"Ø SHALL BE EJP OR MUELLER H-615, H-616 (OR STAINLESS STEEL SLEEVES) TAPPING VALVES SHALL BE 2360 SERIES BY MUELLER OR THE AFC 2500. TEES FOR MAINS WILL BE CUT-IN ONLY WHEN THE NEW MAIN IS TO BE LARGER THAN OR EQUAL SIZE TO THE EXISTING MAIN OR WHEN A NEW VALVE IS TO BE INSTALLED ON THE EXISTING MAIN NEAR THE LOCATION OF THE NEW TEE. SIZE-ON-SIZE IS PERMISSIBLE FOR MAINS 12"Ø AND UNDER. STAINLESS STEEL SLEEVES SHALL MEET THE FOLLOWING REQUIREMENTS:
    A. DUCTILE IRON OR STAINLESS STEEL FLANGE.
    B. 304 STAINLESS STEEL FULL BODY WITH STAINLESS STEEL BOLTS AND NUTS
17. WATER TAP SERVICE TO BE PROVIDED FOR BOTH SHORT AND LONG SIDES.
18. ALL FIRE PLANS, SPRINKLER PLANS SHALL BE SUBMITTED TO THE BRAZIL FIRE DEPARTMENT (BFD) FOR REVIEW AND APPROVAL.
19. FLOW TEST DATA SHALL BE OBTAINED BY THE DEVELOPER/OWNER AT NO COST TO THE CITY AND UNDER THE SUPERVISION OF THE BFD AND WATERWORKS DEPT. TEST RESULTS AND DFD CERTIFICATION TO BE SUBMITTED TO THE BRAZIL BOARD OF WORKS.
20. ALL DOMESTIC (LAWN) SPRINKLER SYSTEMS SHALL BE 1-INCH SERVICE.
21. WHENEVER PROPIERTARY EQUIPMENT IS SPECIFIED "OR APPROVED EQUAL" IMPLIED, ALL PROPOSALS FOR SUBSTITUTION SHALL BE SUBMITTED TO THE CITY IN WRITING FOR THEIR APPROVAL.